parsec TECHNOLOGIES

Rottweiler PRO Series

Ideal for:

- Transportation/Fleet
- FirstNet/First Responders
- Remote Video Monitoring
- Mobile Broadband

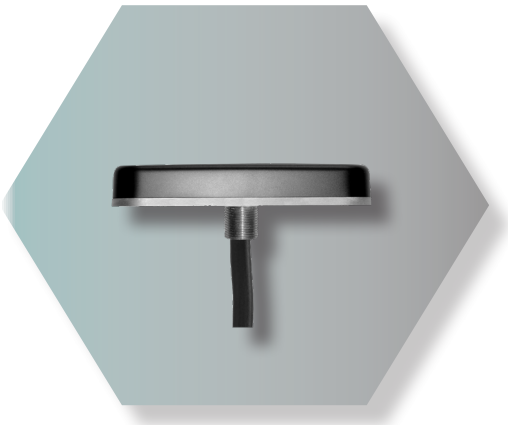

- MIMO LTE
- UP to 3 WIFI
- GPS
- IP67 RATED

Features

- 5G
- CAT 18
- 600 MHz - 6 GHz*
- HIGH EFFICIENCY
- HIGH PERFORMANCE

*See inside for details

Product Description

The Rottweiler PRO Series antennas are high-performance, 5G, CAT18 (600MHz - 6GHz) antennas. The Rottweiler antennas are perfect for FirstNet, first responders, critical communications, transportation/fleet, remote video monitoring, and mobile broadband.

The Rottweiler Series are low profile, high-performance, external antennas available with MIMO LTE, up to 3 WiFi, and GPS. **Patent pending.**

Frequency Ranges

LTE frequency range

- 617 – 894 MHz
- 1695 – 2700 MHz
- 3300 – 3800 MHz (CBRS)
- 5150 – 5925 MHz (LTE LAA)

WiFi frequency range

- 2400 – 2483.5 MHz
- 4900 – 5900 MHz

LTE Bands (US Carriers)

AT&T	2, 4, 5, 14, 17, 29, 30, 48, 66
Verizon	2, 4, 5, 13, 48, 66
T-Mobile	2, 4, 12, 48, 66
Sprint	2, 25, 26, 41, 48
Mechanical	
Dimensions	8.5 x 3.65 x 1.45 inches
Mounting Hole	Single 1 inch
Environmental	
Operating Temperature	-40°C to 85°C
Ingress Protection	IP67 waterproof

Product Dimensions

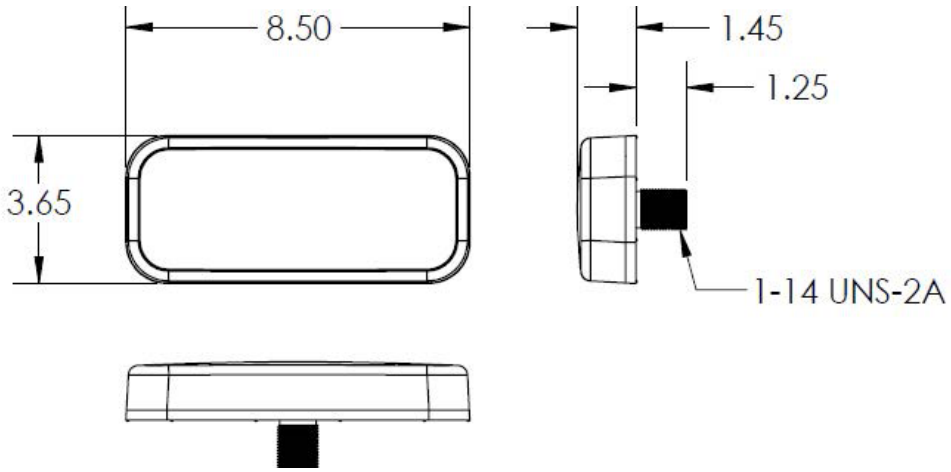

Electrical Specifications

ID	Port	Parameters	Units	Typ.
Radiated Efficiency	LTE-1,2	698 – 960 MHz	%	60
	LTE-1,2	1710 – 2200 MHz		70
	LTE-1,2	2300 – 2700 MHz		60
	LTE-1,2	3300 – 3800 MHz		70
	GPS	1575.42MHz		80
	WiFi-1,2	2400 – 2483.5 MHz		70
	WiFi-1,2	4900 – 5900 MHz		70
Peak Gain	LTE-1,2	698 – 960 MHz	dBi	1.8
	LTE-1,2	1710 – 2200 MHz		6.9
	LTE-1,2	2300 – 2700 MHz		8.4
	LTE-1,2	3300 – 3800 MHz		6.2
	GPS	1575.42MHz		6.0
	WiFi-1,2	2400 – 2483.5 MHz		5.8
	WiFi-1,2	4900 – 5900 MHz		7.9
Return Loss (50 Ω)	LTE-1,2	698 – 960 MHz	dB	5
	LTE-1,2	1710 – 2200 MHz		8
	LTE-1,2	2300 – 2700 MHz		5
	LTE-1,2	3300 – 3800 MHz		9
	GPS	1575.42MHz		12
	WiFi-1,2	2400 – 2483.5 MHz		14
	WiFi-1,2	4900 – 5900 MHz		9
Isolation	LTE-1 to 2	698 – 960 MHz	dB	13
	LTE-1 to 2	1710 – 2700 MHz		21
	LTE-1 to 2	3300 – 3800 MHz		21
	WiFi-1,2,3	2400 – 2483.5 MHz		13
	WiFi-1,2,3	4900 – 5900 MHz		18

Electrical Specifications
(Continued)

Polarization	LTE, WiFi GPS		Linear RHCP
Max Input Power	LTE, WiFi	Watts	5
GNSS Preamp Gain	GPS	dB	28
GNSS Preamp Voltage	GPS	V	2.2 to 5.0
RF Connectors	LTE, GPS WiFi		SMA(M) RP-SMA
Cables	LTE, WiFi GPS		LMR200 LMR100

Ordering

Our Rottweiler antennas come in 1’ or 15’ cable options and black or white radome.

Configurations	Order Number	Description
2:1	PRO2R2L01B PRO2R2L15B PRO2R2L01W PRO2R2L15W	2 LTE, 1’ cable, black radome 2 LTE, 15’ cable, black radome 2 LTE, 1’ cable, white radome 2 LTE, 15’ cable, white radome
3.1	PRO3R2LG01B PRO3R2LG15B PRO3R2LG01W PRO3R2LG15B	2 LTE, GPS, 1’ cable, black radome 2 LTE, GPS, 15’ cable, black radome 2 LTE, GPS, 1’ cable, white radome 2 LTE, GPS, 15’ cable, white radome
4.1	PRO4R2L2W01B PRO4R2L2W15B PRO4R2L2W01W PRO4R2L2W15W	2 LTE, 2 WiFi, 1’ cable, black radome 2 LTE, 2 WiFi, 15’ cable, black radome 2 LTE, 2 WiFi, 1’ cable, white radome 2 LTE, 2 WiFi, 15’ cable, white radome
5.1	PRO5R2L2WG01B PRO5R2L2WG15B PRO5R2L2WG01W PRO5R2L2WG15W	2 LTE, 2 WiFi, GPS, 1’ cable, black radome 2 LTE, 2 WiFi, GPS, 15’ cable, black radome 2 LTE, 2 WiFi, GPS, 1’ cable, white radome 2 LTE, 2 WiFi, GPS, 15’ cable, white radome
6.1	PRO6R2L3WG01B PRO6R2L3WG15B PRO6R2L3WG01W PRO6R2L3WG15W	2 LTE, 3 WiFi, GPS, 1’ cable, black radome 2 LTE, 3 WiFi, GPS, 15’ cable, black radome 2 LTE, 3 WiFi, GPS, 1’ cable, white radome 2 LTE, 3 WiFi, GPS, 15’ cable, white radome

Part Number Key

Part number example of a 6:1 Rottweiler antenna, black:
PRO6R2L3WG15B

Description	Abbreviation	Part Number
All PRO Series	PRO	PRO
Number of antennas in housing/configuration	9:1	PRO6
Antenna abbreviation for Collie	R	PRO6R
Number of LTE Elements	# L	PRO6R2L
Number of WiFi Elements	# W	PRO6R2L3W
Number of GPS Elements (usually only 1 GPS per antenna, therefore we simply list G and no number)	G	PRO6R2L3WG
Cable length measured in feet: 01 = 1’, 15 = 15’	01, 15, etc,	PRO6R2L3WG15
Radome Color - B for Black, W for White	B or W	PRO6R2L3WG15B
If SMA connector, simply leave blank		PRO6R2L3WG15B
N connector	N	PRO6R2L3WG15BN
TNC connector	T	PRO6R2L3WG15BT